PLUMBING BASIC SYMBOLS

(NOT ALL SYMBOLS ARE NECESSARILY USED ON THIS PROJECT)

	EXISTING PIPING
	EXISTING PIPING TO BE REMOVED
AB	PIPING TO BE ABANDONED
	NEW SOIL, WASTE OR SANITARY PIPING
	VENT PIPING (SANITARY)
	PIPING BELOW SLAB (UNDERGROUND/FLOOR BELOW)
	DOMESTIC COLD WATER PIPING
	DOMESTIC HOT WATER PIPING (120°)
	DOMESTIC HOT WATER CIRCULATION PIPING
	PIPING w/FREEZE PROTECTION CABLE & INSULATION
	ARROW INDICATES DIRECTION OF FLOW
G	GAS PIPING
EJ	EJECTOR DISCHARGE PIPING
IW	INDIRECT WASTE PIPING
SD	SUMP PUMP DISCHARGE PIPING
ST	STORM WATER DRAINAGE PIPING
	DISCONNECT FROM EXISTING
	CONNECT TO EXISTING
	SHOCK ARRESTOR
	HOSE BIBB
	CLEAN OUT/PLUGGED OUTLET
	CAPPED OUTLET
	CLEAN-OUT DECK PLATE
	P-TRAP
	VACUUM BREAKER
	BOTTOM PIPE CONNECTION
	TOP PIPE CONNECTION
	SIDE CONNECTION
	PIPE DOWN/DROP
	PIPE RISE/UP
	PIPE SLOPE
	VALVE IN VERTICAL
	UNION
	REDUCER
	WATER PROOF SLEEVE
	SLEEVE
	PRESSURE GAUGE w/GAUGE COCK
	TEMPERATURE GAUGE
	FLOOR DRAIN
	PUMP
M	WATER METER
	VENT THRU ROOF
	TRAP
EXIST. / NEW	
	TEMPERATURE AND PRESSURE RELIEF VALVE
	PLUG VALVE
	MIXING VALVE
	RELIEF VALVE
	BALL VALVE
LS / LS	BALL VALVE w/LOCK SHIELD
	CONTROL VALVE
	GLOBE VALVE
	OUTSIDE SCREW & YOKE (OS & Y) VALVE
	CHECK VALVE
	PRESSURE REDUCING VALVE (PRV)
	SOLENOID VALVE
	Y STRAINER w/BLOW-OFF VALVE
RPZ	REDUCED PRESSURE ZONE BACKFLOW PREVENTER ASSEMBLY
DCV	DETECTOR CHECK VALVE ASSEMBLY

PLUMBING ABBREVIATIONS

(NOT ALL ABBREV. ARE NECESSARILY USED ON THIS PROJECT)

AD	AREA DRAIN
AFF	ABOVE FINISHED FLOOR
BLDG	BUILDING
BOP	BOTTOM OF PIPE
CO	CLEANOUT
CODP	CLEANOUT DECK PLATE
CM	COFFEE MAKER
CV	CHECK VALVE
CVO	CAPPED AND VALVED OUTLET
CW	COLD WATER
CLG	CEILING
CONN	CONNECT
CONT	CONTINUATION
DIA	DIAMETER
DN	DOWN (PENETRATES FLOOR SLAB)
DR	DRAIN
DWG	DRAWING
(E)	EXISTING
EJ DIS	EJECTOR DISCHARGE
EL	ELEVATION
FAI	FRESH AIR INLET
FD	FLOOR DRAIN
FU	FIXTURE UNIT
FL	FLOOR
FT	FEET
GAL	GALLONS
GC	GENERAL CONTRACTOR
GI	GREASE INTERCEPTOR
GPM	GALLONS PER MINUTE
HB	HOSE BIBB
HCLG	HUNG CEILING
HW	HOT WATER
HWR	HOT WATER RETURN
ID	INSIDE DIAMETER
IW	INDIRECT WASTE
IN	INCH
JS	JANITOR'S SINK
LAV	LAVATORY
MAX	MAXIMUM
MIN	MINIMUM
MR	MOP RECEPTOR
(N)	NEW
NC	NORMALLY CLOSED
NIC	NOT IN THIS CONTRACT
NO	NORMALLY OPEN
NTS	NOT TO SCALE
OD	OUTSIDE DIAMETER
OS&Y	OUTSIDE SCREW & YOKE GATE VALVE
PC	PLUMBING CONTRACTOR
PD	PUMP DISCHARGE
PO	PLUGGED OUTLET
PRV	PRESSURE REDUCING VALVE
PSI	POUNDS PER SQUARE INCH (GAUGE)
SA	SHOCK ABSORBER
SAN	SANITARY
SD	SUMP PUMP DISCHARGE
SK	SINK
SQ FT	SQUARE FOOT
TYP	TYPICAL
UON	UNLESS OTHERWISE NOTED
UP	UP (PENETRATES FLOOR SLAB)
UR	URINAL
V	VENT
VB	VACUUM BREAKER
W	WASTE
WC	WATER CLOSET
WCO	WALL CLEANOUT

GENERAL PLUMBING NOTES:

1. EACH BIDDER SHALL VISIT THE SITE AND BECOME INFORMED AS TO THE CONDITION OF THE PREMISES AND THE EXTENT AND CHARACTER OF WORK REQUIRED. NO ADDITIONAL COMPENSATION WILL BE APPROVED DUE TO THE FIELD CONDITIONS.
2. ALL EXISTING SYSTEM SHALL BE LEFT IN PERFECT WORKING ORDER UPON COMPLETION OF ALL NEW WORK.
3. EXACT SIZES AND LOCATIONS OF ALL EXISTING PIPING SHALL BE VERIFIED ON THE SITE.
4. NO REMOVED EXISTING PIPING SHALL BE REUSED UNLESS OTHERWISE INDICATED.
5. THIS CONTRACTOR SHALL NOT INTERRUPT ANY OF THE SERVICES OF THE EXISTING BUILDING NOR INTERFERE WITH THE SERVICES IN ANY WAY WITHOUT THE EXPRESSED PERMISSION OF THE OWNER. SUCH INTERRUPTIONS AND INTERFERENCES SHALL BE MADE AS BRIEF AS POSSIBLE AND ONLY AT THE SUTIED BY THE OWNER.
6. UNDER NO CIRCUMSTANCES WILL THIS CONTRACTOR OR HIS WORKMEN BE PERMITTED TO USE ANY PART OF THE BUILDING AS A SHOP, EXCEPT PART DESIGNATED BY THE OWNER FOR SUCH PURPOSES.
7. UNNECESSARY NOISE SHALL BE AVOIDED AT ALL TIMES AND NECESSARY NOISE SHALL BE REDUCED TO A MINIMUM.
8. WHERE THE WORK MAKES TEMPORARY SHUT DOWN OF SERVICES UNAVOIDABLE, THEY SHALL BE MADE AT NIGHT OR AT TIMES AS THIS WILL CAUSE THE LEAST INTERFERENCE WITH THE ESTABLISHED OPERATING ROUTINE OF THE BUILDING.
9. THIS CONTRACTOR SHALL ARRANGE THE WORK CONTINUOUSLY, INCLUDING APPROVED BY THE ARCHITECT OVERTIME IF REQUIRED, TO ASSURE THAT SERVICES WILL BE SHUT DOWN AND CUT-INS ONLY DURING THE TIME ACTUALLY REQUIRED TO MAKE THE NECESSARY CONNECTION TO EXISTING WORK.
10. THIS CONTRACTOR SHALL GIVE AMPLE WRITTEN NOTICE IN ADVANCE TO THE OWNER OF ANY REQUIRED SHUT DOWNS.
11. ANY AND ALL REQUIRED DEMOLITION WORK TO BE PERFORMED ABOVE EXISTING SUSPENDED CEILINGS AND FURRED OUT WALLS SHALL BE DONE AT THE TIME WHEN THE EXISTING CEILINGS AND FURRED OUT WALLS ARE REMOVED BY THE GENERAL CONTRACTOR.
12. TO ENSURE CONTINUOUS OPERATION, MAKE ALL NECESSARY TEMPORARY CONNECTIONS BETWEEN NEW AND EXISTING WORK. ALL COST RESULTING FROM TEMPORARY SHUTDOWNS SHALL BE BORNE BY THIS CONTRACTOR.
13. PROVIDE DRAIN BIB AT THE BASE OF EACH HOT AND COLD WATER RISER.
14. ALL GAS, VENT, HOT WATER CIRCULATION, HOT AND COLD WATER PIPING ARE AT CEILING OR IN HUNG CEILING: EXCEPT IN PIPE SPACES OR OTHERWISE NOTED.
15. NO GAS VALVE SHALL BE LOCATED IN HUNG CEILING.
16. CONTRACTOR SHALL CHECK AND VERIFY THE EXACT LOCATION OF ALL PIPE PENETRATIONS AND PIPE ELEVATIONS.
17. ACCESS DOORS SHALL BE PROVIDED FOR ALL CLEANOUTS. VALVES, FLUSH VALVES, AND ANY OTHER EQUIPMENT AND ACCESSORIES THAT MAY REQUIRED ACCESS FOR MAINTENANCE OR OPERATION WHICH ARE LOCATED BEHIND WALLS AND PARTITIONS OR CONCEALED IN HUNG CEILINGS.
18. CONTRACTOR SHALL REFER TO AND COORDINATE WITH OTHER TRADES DRAWINGS FOR WORK OF CONCRETE PADS, HOUSE TRAP PIT AND GREASE TRAP PITS.
19. ALL PLUMBING WORK SHALL MEET THE REQUIREMENT OF THE LOCAL PLUMBING CODE, AND OTHER AGENCIES AND AUTHORITIES HAVING JURISDICTION.

DRAIN SCHEDULE

DESIGNATION	MANUFACTURER: J.R. SMITH	JOSAM	ZURN	WADE				BODY: CAST IRON	GALVANIZED	STAINLESS STEEL	ENAMEL COATED	ALL BRONZE	SECONDARY CLAMP	CLAMPING DEVICE	DECK CLAMP	BACK WATER VALVE	SUMP RECEIVER	STRAINER: CAST IRON	GALVANIZED	STAINLESS STEEL	DUCTILE IRON	ALL BRONZE	NICKEL BRONZE	CHROME PLATED	SEDIMENT BUCKET	SECONDARY STRAINER	POLISHED FINISH	SATIN FINISH	MEDIUM DUTY GRATE	HEAVY DUTY GRATE	FUNNEL TOP	FLAT TOP	DOME	RAISED LIP	EXTENSION	LESS GRATE	½ GRATE	¾ GRATE	CENTER HOLE	HEEL PROOF	REMARKS
	MODEL NO.																																								
A	ZN-1910-2-23							●			●			●				●											●			●										FLOOR SINK (INSTALL FLUSH TO FLOOR)
B	ZN-415-6B-IC							●			●			●									●									●								●		FLOOR DRAIN
C	Z-890									●	●										●									●		●					●					TRENCH DRAIN

PRESSURE VESSEL AND HEATER SCHEDULE

DESIGNATION	NO. REQUIRED	MANUFACTURER AND MODEL NUMBER	STORAGE WATER TEMPERATURE (DEG.F)	VOLUME/HEATER (GALS.)	RECOVERY/HEATER (GPH)	TEMPERATURE RISE (DEG.F)	MAXIMUM WATER FLOW (G.P.M.)	W.W.P. (PSIG.)	TEST PRESSURE (PSIG.)	DIAMETER (INCHES)	LENGTH/HEIGHT (INCHES)	ELECTRIC: ELECTRIC LOAD (K.W.)	PHASE	VOLT	REMARKS	DRAWING NO.
HWH	1	A.O. SMITH MODEL DSE-50	120	50	31	80	--	150	--	20.5	54.5	6.0	3	208		

PLUMBING FIXTURE SCHEDULE

FIXTURE TYPE	SERVICE CONNECTION: S	W	V	CW	HW	REMARKS
SK		2"	1½"	½"	½"	REFER TO ARCHITECTURAL DRAWINGS FOR EXACT MAKE/MODEL AND MOUNTING HEIGHT

PLUMBING DRAWING INDEX

DRAWING NO.	DRAWING TITLE
P-101	PLUMBING COVER SHEET
P-201	PLUMBING INSTALL PLAN AND RISER DIAGRAMS
P-301	PLUMBING DETAILS
P-401	PLUMBING SPECIFICATIONS

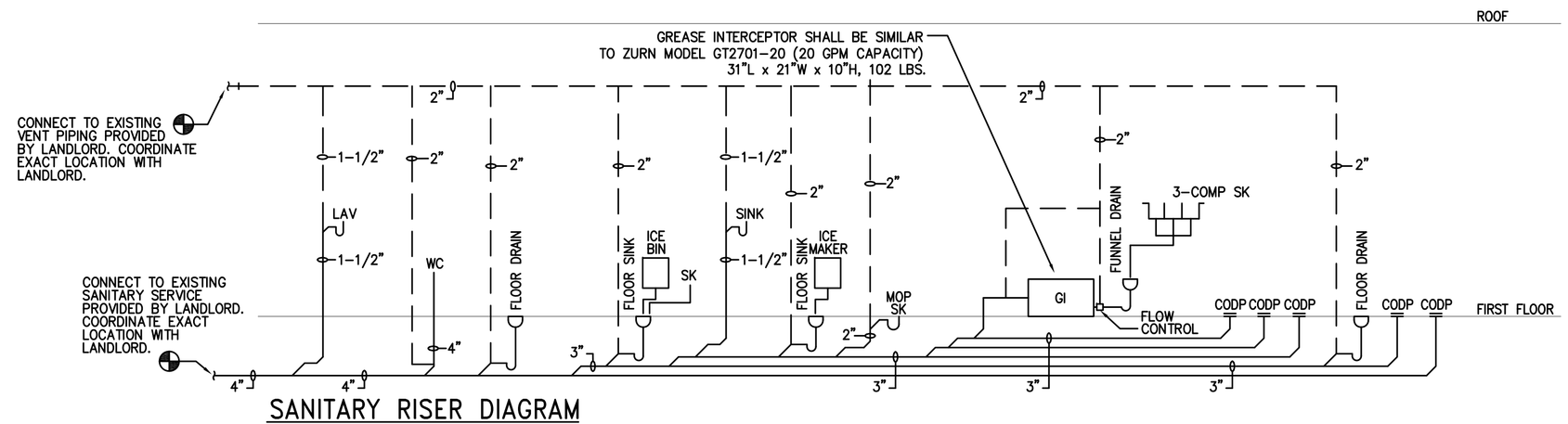

SANITARY RISER DIAGRAM

NO SCALE

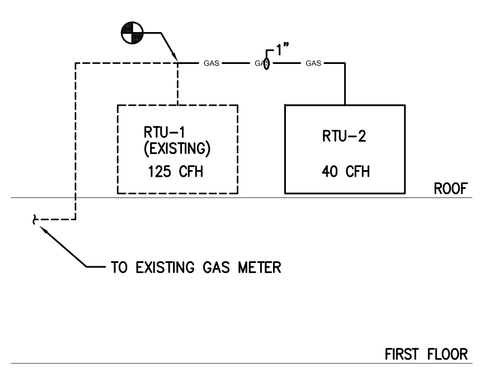

GAS RISER DIAGRAM

NO SCALE

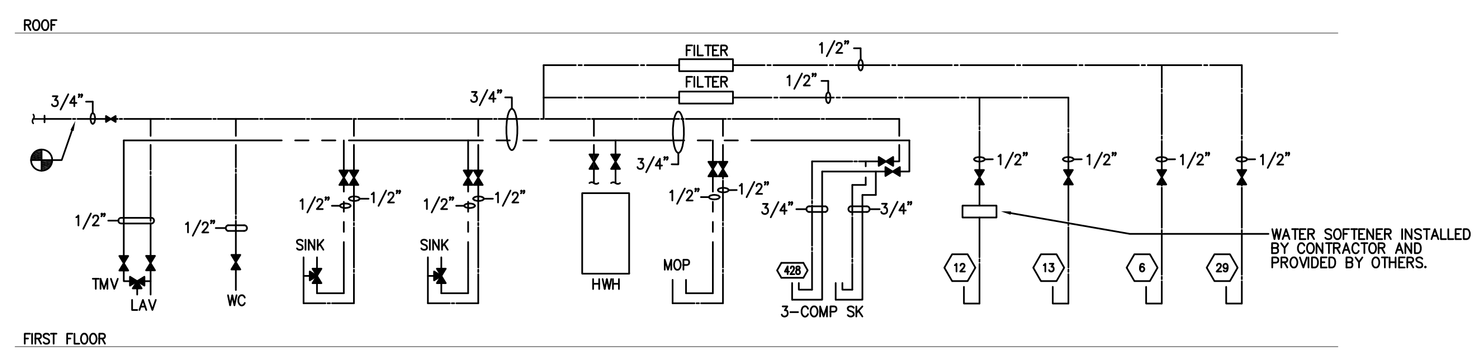

DOMESTIC RISER DIAGRAM

NO SCALE

CDG
CANZONERI DEVELOPMENT GROUP INC.
248A Scherer Boulevard
Franklin Square, New York 11010
516.502.4585
info@canzoneri.com

t e engineering
108-18 Queens Blvd., Suite 1A
Forest Hills, NY 11375
tel. 718.268.0988
fax. 718.268.0989
t.e. project no. 1100034
www.tateengineering.com

PROJECT:
New Crumbs Bakeshop @
2838 N Clarendon Blvd.
Arlington, Virginia 22201

CLIENT:
Crumbs Bakeshop
110 West 40th Street
Suite 310
New York, New York 10018

ISSUES:

No.	Date	Description
1	06.14.10	ISSUED FOR REVIEW
1	06.23.10	ISSUED FOR BID

SEAL:

DRAWN BY: RT

SCALE: As Noted

DRAWING TITLE: Plumbing Cover Sheet

DRAWING NO.
P-101.00

SHEET 1 OF 4